HIGH-CYCLE HYDRAULIC DRUM CRUSHER/ COMPACTOR - HDC-905-HC/208V

APPROX WEIGHT: 1961.88 lbs.
DOES NOT INCLUDE WEIGHT OF POWER OR PACKAGING!!!

*** ANY ADDITIONS, DELETIONS, OR OMISSIONS MUST BE CORRECTED ON THIS DRAWING AS THIS DRAWING WILL BE CONSIDERED ALL INCLUSIVE ***

ALL GRAPHICS PROVIDED ARE FOR REFERENCE ONLY. IF CERTAIN DIMENSIONS ARE CRITICAL PLEASE VERIFY THOSE DIMENSIONS WITH YOUR SALESPERSON

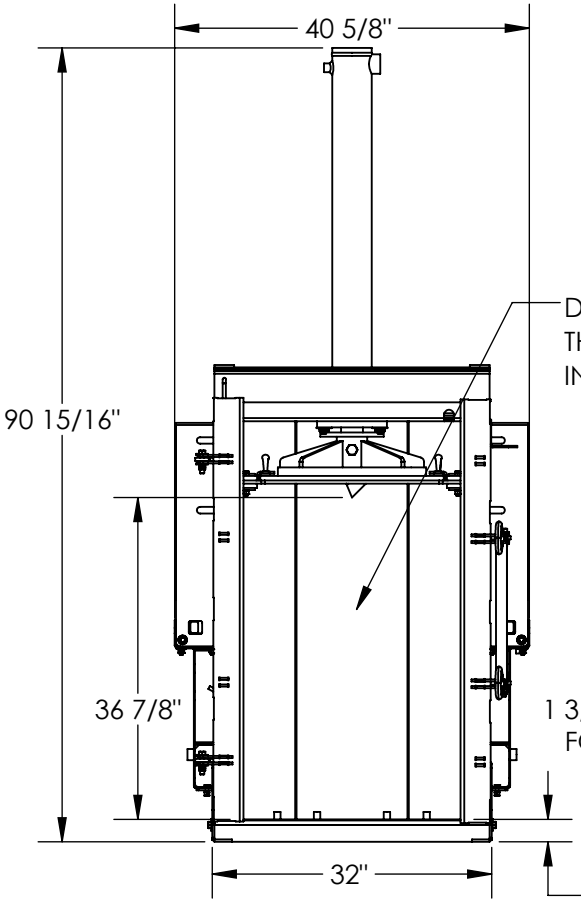

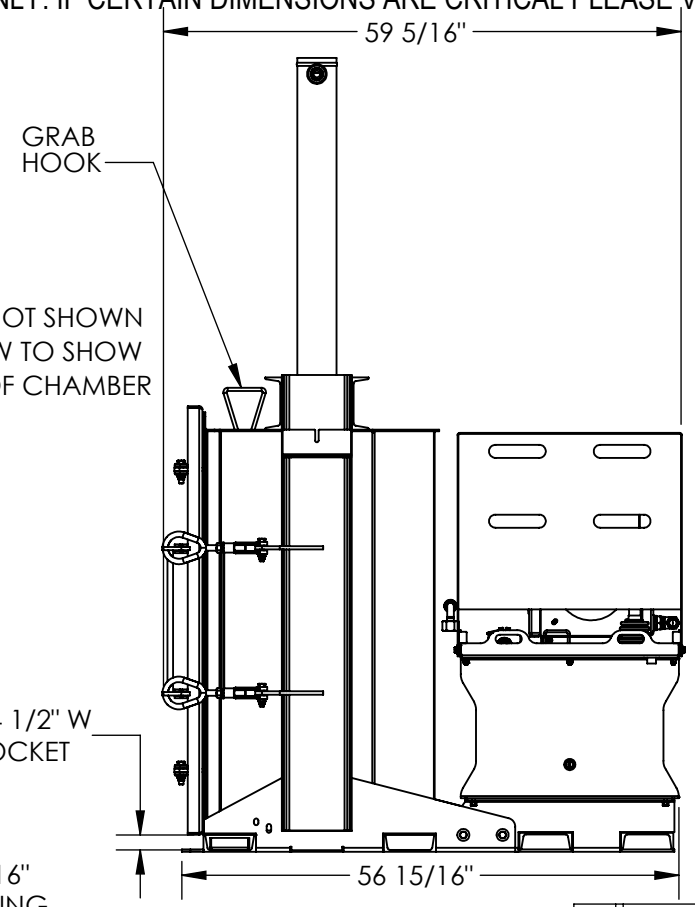

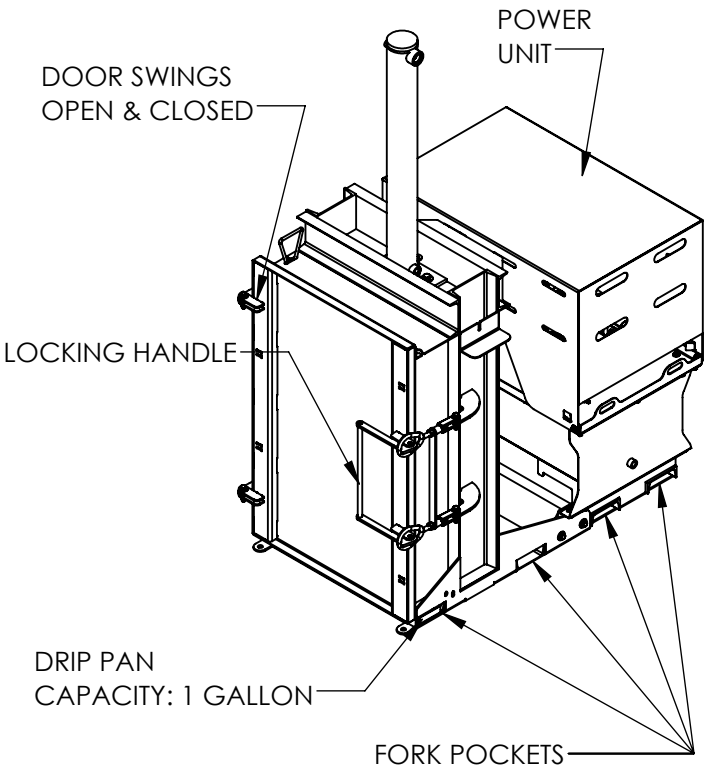

DIMENSION TOLERANCE ± 1/4"

208/230V 3 PHASE AC POWER

CONTACT FACTORY FOR OTHER POWER OPTIONS

STANDARD FEATURES

DRUM CRUSHER AND COMPACTOR MODEL NUMBER HDC-905-HC/208V
FITS STEEL AND FIBER DRUMS WITH MAX Ø 23-1/2" x 35-1/2" HIGH
POSITIVE DRUM POSITIONING
DRUM HEAD PIERCER TO RELEASE INTERNAL DRUM PRESSURE
4" DIA. PISTON CYLINDER W/ 36" OF STROKE
FULL CYCLE TIME OF 25 SECONDS (CRUSH AND RETRACT)
HYDRAULIC SYSTEM PRESSURE RATING: 3000 PSI W/ HYDRAULIC SYSTEM RELIEF VALVE
38,000 LBS. OF CRUSHING FORCE REDUCES STEEL DRUMS TO ONLY 6" HIGH
24V CONTROL CIRCUIT WITH:
- ON/OFF KEY SWITCH
- CYCLE START BUTTON
- CRUSH / COMPACT SELECTOR SWITCH

TWO PRESSURE SWITCHES: HIGH PRESSURE FOR CRUSHING & LOW PRESSURE FOR COMPACTING
Ø 21" COMPACTING PLATE COMPACTS CONTENTS INSIDE A 55 GALLON DRUM
DOOR INTERLOCK SWITCH
7.5 HP MOTOR (PREWIRED FOR 208V 3PH) & 2-SPEED HYD. GEAR PUMP (11 GPM)
STEEL CONSTRUCTION WITH DURABLE LIQUID PAINT BLUE FINISH

SPECIAL FEATURES

NONE

APPROVAL

I, THE UNDERSIGNED, AGREE THAT THE PRODUCT AS REPRESENTED SATISFIES DESIGN AND DIMENSION REQUIREMENTS. I ALSO ACKNOWLEDGE MY DUTY TO CONFIRM PRODUCT AND INSTALLATION COMPLIANCE WITH ALL APPLICABLE FEDERAL, STATE AND LOCAL REGULATIONS AND STANDARDS.

UNITS REQUIRING APPROVAL DRAWINGS OR MODIFIED ARE NON-RETURNABLE

[ ] As drawn [ ] As marked

Signed:_____ Date:_____

Printed Name:_____

LEAD TIME WILL START UPON RECEIPT OF SIGNED APPROVAL DRAWING

DISTRIBUTOR'S NAME: VESTIL MANUFACTURING		P.O.# X
		W.O.# X
DRAWN BY: TAW	DATE: 08/08/2016	SALES: X
REFERENCE: X	SCALE: 1:22	FILE NAME: 22-007-015-001
QUOTED LEAD TIME: X	QUOTE # X	