Vertical Twin Tenon

PM-SSS-O-VT-D180

Project: _____ Location: _____

Date: _____ Part #: _____

Notes: _____

Description

- Vertical Twin Bracket
- Durable dark bronze powder coat
- 180° orientation designed to slip fit onto 2-3/8 in., 2-7/8 in. and 4 in. tenons
- 5 Year Warranty

Dimensions
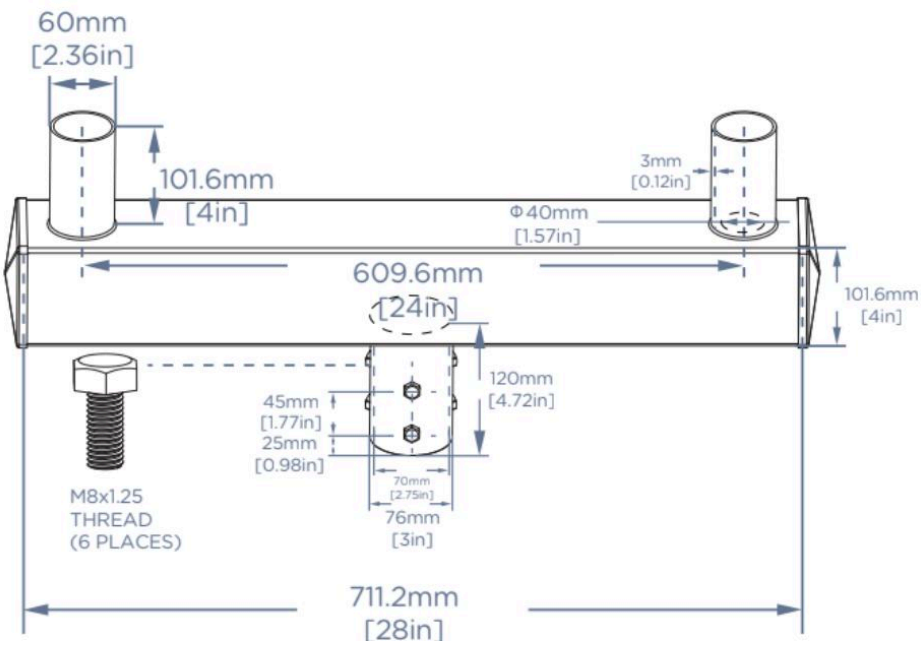
- Base: M8×1.25 Thread (4 PLACES)
- Tenon: 2 x vertical tenon OD60 x HT4”