ZJ4010

Female wirable connectors

SDOGF030ZDSFKPG

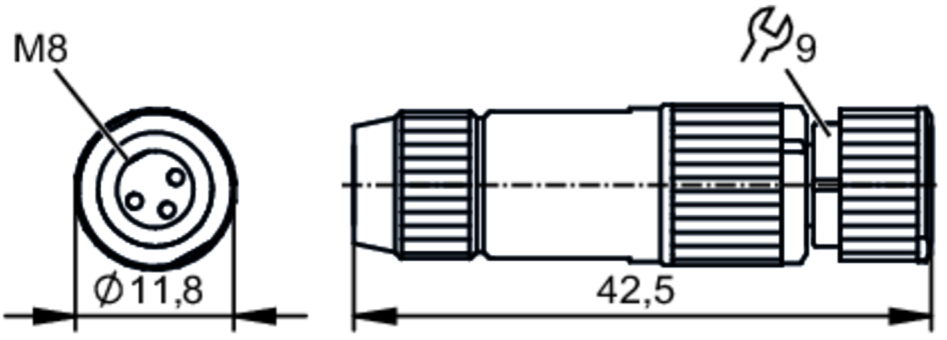

Application		
System		gold-plated contacts
Electrical data		
Operating voltage	[V]	< 32 AC/DC
Protection class		III
Max. current load total	[A]	4
Operating conditions		
Ambient temperature	[°C]	-25...85
Protection		IP 67
Mechanical data		
Weight	[g]	15
Material		PA
Molded-body material		PA
Material nut		diecast zinc
Accessories		
Items supplied		sealing: 2,5...3,2 mm/3,2...4 mm/4...5,1 mm
Remarks		
Pack quantity		1 pcs.

ZJ4010

Female wirable connectors

SDOGF030ZDSFKPG

Electrical connection

insulation displacement technology: 0.14...0.34 mm²; Core insulation: PVC/PP/TPE; (Ø 1.0...1.6 mm); Cable sheath: Ø 2.5...5.1 mm

Electrical connection - Socket

Connector: 1 x M8, straight; coding: A; Moulded body: PA; Locking: diecast zinc; Contacts: gold-plated

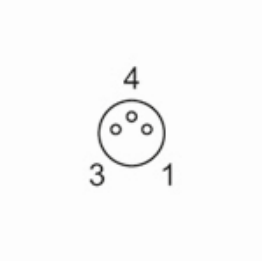
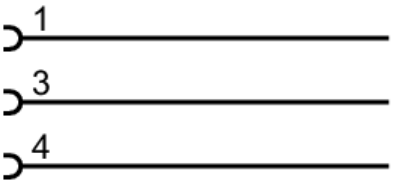
Connection