TSM201

Temperature cable sensor with bolt-on sensor

TSM015K2PCXX/US/

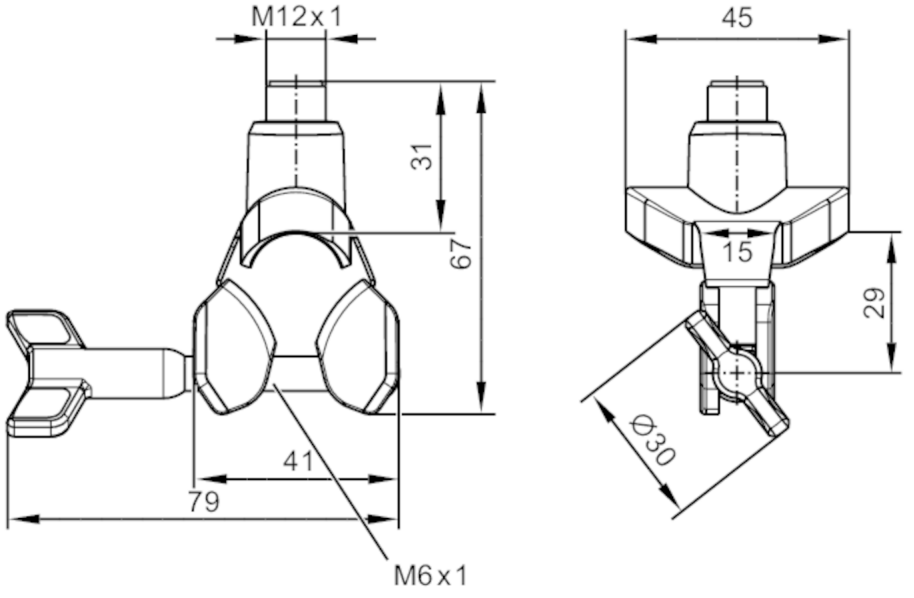

Product characteristics			
Measuring range		-25...160 °C	-13...320 °F
Process connection		bolt-on sensor DN15 (Ø 17...21 mm)	
Application			
System		gold-plated contacts	
Measuring element		1 x Pt 1000; (to DIN EN 60751, class A)	
Installation		Contact sensor for solid bodies; clamp-on solution	
Electrical data			
Protection class		III	
Overvoltage category		II	
Measuring/setting range			
Measuring range		-25...160 °C	-13...320 °F
Accuracy / deviations			
Accuracy	[K]	± (0,15 K + 0,002 x|T|); (ambient temperature influence on the accuracy: 0,025 x (Ta - T))	
Reaction times			
Dynamic response T05 / T09	[s]	7,5 / 25; (reference values for moving water : (> 0,4 m/s))	
Operating conditions			
Ambient temperature	[°C]	-25...80	
Max. relative air humidity	[%]	90; (non condensing)	
Max. height above sea level	[m]	2000	
Protection		IP 69K	
Degree of soiling		3	
Tests / approvals			
MTTF	[years]	22831	

TSM201

Temperature cable sensor with bolt-on sensor

TSM015K2PCXX/US/

Mechanical data		
Weight	[g]	132.9
Design		Surface temperature probe
Dimensions	[mm]	67 x 79 x 45
Material		Mounting clamp: stainless steel (1.4404 / 316L); housing: PPSU; Gasket: FKM
Process connection		bolt-on sensor DN15 (Ø 17...21 mm)

Remarks	
Remarks	Ta = Ambient temperature
	T = Process temperature
Pack quantity	1 pcs.

Electrical connection

Connector: 1 x M12; coding: A; Contacts: gold-plated
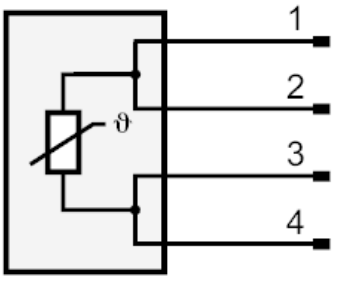
Connection