SU7050

Ultrasonic flow meter

SUR34XJBFRKG/US

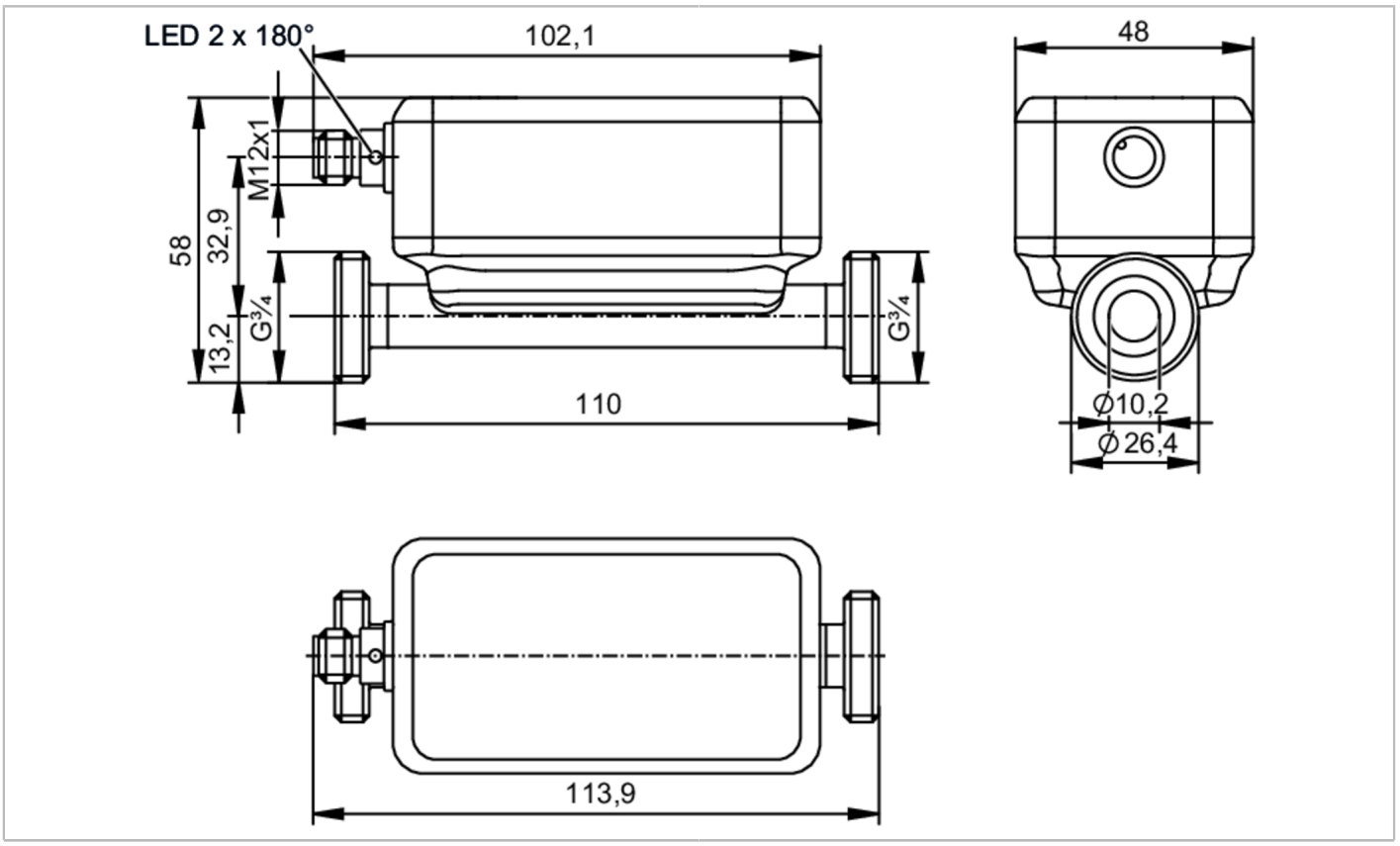

ACS CE c UL us LISTED IO-Link KTW/W270 Reg31

Product characteristics				
Number of inputs and outputs	Number of digital outputs: 2; Number of analog outputs: 1			
Measuring range	0.5...75 l/min	0.03...4.5 m³/h	8...1189 gph	0.13...19.81 gpm
Nominal diameter	DN20 (3/4“)			
Process connection	threaded connection G 3/4 external thread DN20			
Application				
System	gold-plated contacts			
Application	use in mobile and industrial applications			
Media	ultra-pure water; water; water-based media; glycol solutions; oils (of high and low viscosity); Coolants			
Note on media	water-based media: for media with >10 % additives, the repeatability is the only available value			
	low-viscosity oils with viscosity: 7...40 mm²/s (40 °C)			
	high-viscosity oils with viscosity: 30...68 mm²/s (40 °C)			
Medium temperature	-40...120 °C		-40...248 °F	
Min. burst pressure	150 bar		15 MPa	
Pressure rating	100 bar		10 MPa	
Vacuum resistance [mbar]	-1000			
Electrical data				
Operating voltage [V]	8...32 DC; (to SELV/PELV)			
Current consumption [mA]	< 175			
Protection class	III			

SU7050

Ultrasonic flow meter

SUR34XJBFRKG/US

Reverse polarity protection		yes		
Power-on delay time	[s]	5		
Measuring principle		ultrasonic		
Inputs / outputs				
Total number of inputs and outputs		2		
Number of inputs and outputs		Number of digital outputs: 2; Number of analog outputs: 1		
Inputs				
Inputs		OUT2	counter reset	
Outputs				
Total number of outputs		2		
Output signal		OUT1	switching signal; pulse signal; diagnostic signal; totalizer switching signal; frequency signal; IO-Link	
		OUT2	switching signal; pulse signal; diagnostic signal; totalizer switching signal; analog signal	
Electrical design		PNP/NPN		
Number of digital outputs		2		
Output function		normally open / closed; (configurable)		
Max. voltage drop switching output DC	[V]	2		
Permanent current rating of switching output DC	[mA]	100		
Switching frequency DC	[Hz]	0...10000		
Number of analog outputs		1		
Analog current output	[mA]	4...20; (scalable)		
Max. load	[Ω]	500		
Analog voltage output	[V]	0...10 / 0.5...4.5; (scalable)		
Min. load resistance	[Ω]	2000		
Pulse output		flow rate meter		
Short-circuit protection		yes		
Type of short-circuit protection		yes (non-latching)		
Overload protection		yes		
Measuring/setting range				
Measuring range		0.5...75 l/min	0.03...4.5 m³/h	8...1189 gph	0.13...19.81 gpm
Resolution		0.1 l/min	0.002 m³/h	1 gph	0.01 gpm
Note on factory setting		l/min			
		°C			
Set point SP		0.9...75 l/min	0.055...4.5 m³/h	15...1189 gph	0.24...19.81 gpm
Reset point rP		0.5...74.6 l/min	0.032...4.477 m³/h	9...1183 gph	0.14...19.71 gpm
Analog start point ASP		-75...60 l/min	-4.5...3.6 m³/h	-1189...951 gph	-19.81...15.85 gpm
Analog end point AEP		-60...75 l/min	-3.6...4.5 m³/h	-951...1189 gph	-15.78...19.81 gpm
Low flow cut-off LFC		0.5...3.2 l/min	0.03...0.195 m³/h	8...52 gph	0.13...0.86 gpm
Frequency end point, FEP		15...75 l/min	0.903...4.5 m³/h	238...1189 gph	3.97...19.81 gpm
Frequency at the end point FRP	[Hz]	1...10000			

SU7050

Ultrasonic flow meter

SUR34XJBFRKG/US

Volumetric flow quantity monitoring			
Pulse length	[s]	0.002...2	
Pulse value		0.1...99990000 l; 0.03...26414563.515 gal	
Temperature monitoring			
Measuring range		-40...120 °C	-40...248 °F
Resolution		0.1 °C	0.1 °F
Set point SP		-40...119.4 °C	-40...247 °F
Reset point rP		-40...88 °C	-40...190.4 °F
Analog start point		-8...120 °C	17.6...248 °F
Analog end point		-40...88 °C	-40...190.4 °F
Frequency start point, FSP		-8...120 °C	17.6...248 °F
Frequency end point, FEP		-40...119.4 °C	-40...247 °F
Frequency at the end point FRP	[Hz]	1...10000	
Accuracy / deviations			
Flow monitoring			
Accuracy (in the measuring range)		only up to 100 °C; at higher temperatures, only the repeatability is within the specification.	
Accuracy (in the measuring range)		glycol solutions (35%)	±(5,0 % MW + 0,5 % MEW)
		high-viscosity oils with viscosity 46mm2/s (40°C)	±(5,0 % MW + 1,0 % MEW)
		low-viscosity oils with viscosity 10mm2/s (40°C)	±(5,0 % MW + 1,0 % MEW)
		water	± (2,0 % MW + 0,5 % MEW)
Repeatability		± 0,2 % MEW	
Temperature monitoring			
Accuracy	[K]	± 2,5 (Q > 5 % MEW)	
Temperature coefficient	[% of the span / 10 K]	0,2	
Reaction times			
Flow monitoring			
Response time	[s]	< 0.25; (dAP = 0, T09)	
Damping process value dAP	[s]	0...5	
Temperature monitoring			
Dynamic response T05 / T09	[s]	5,7 / 86	
Software / programming			
Diagnostic functions		direction of flow detection; signal quality	
Interfaces			
Communication interface		IO-Link	
Transmission type		COM2 (38,4 kBaud)	
IO-Link revision		1.1.3	
SDCI standard		IEC 61131-9: 2013-07	
Profiles		BLOB	Binary Large Object transfer
		Common - I&D	Identification and Diagnosis
Required master port class		A	
Process data analog		3	

SU7050

Ultrasonic flow meter

SUR34XJBFRKG/US

Process data binary		2	
Min. process cycle time	[ms]	9.6	
IO-Link process data (cyclical)		**Function**	**bit length**
		totalizer	32
		Flow monitoring	32
		Temperature monitoring	32
		status	4
		Output 1	1
		Output 2	1
Supported DeviceIDs		**Type of operation**	**DeviceID**
		default	1837
Operating conditions			
Ambient temperature	[°C]	-25...60	
Storage temperature	[°C]	-40...80	
Protection		IP 67; IP 69K	
Tests / approvals			
EMC		DIN 61326-1:2021	
Shock resistance		DIN IEC 68-2-27	20 g (11ms)
Vibration resistance		DIN IEC 68-2-6	20 g (10...2000Hz)
MTTF	[years]	136	
UL approval		UL approval number	I037
		File number UL	E174189
Pressure equipment directive		can be used for group 2 fluids; group 1 fluids on request	
Mechanical data			
Weight	[g]	494.6	
Housing		rectangular	
Inlet pipe length		5 x DN	
Outlet pipe length		1 x DN	
Dimensions	[mm]	113.9 x 48 x 58	
Material		housing: stainless steel (1.4404 / 316L); connector: PEI, FKM	
Materials (wetted parts)		Pipe section: stainless steel (1.4404 / 316L); Process connection sealing: NBR fiber-reinforced	
Nominal diameter		DN20 (3/4“)	
Process connection		threaded connection G 3/4 external thread DN20	
Surface characteristics Ra/Rz of the wetted parts		Ra < 1.25 µm	
Displays / operating elements			
Display		operating status	1 x LED, green
Accessories			
Items supplied		Gasket 2, NBR fiber-reinforced	
		package insert	
Remarks			
Remarks		MW = Measured value	
		MEW = Final value of the measuring range	
		pulse and totalizer signal are only available for one of the two outputs	
		the accuracy indications are adhered to over the entire application area	

SU7050

Ultrasonic flow meter

SUR34XJBFRKG/US

Pack quantity	1 pcs.

Electrical connection

Connector: 1 x M12; coding: A; Contacts: gold-plated

Connection

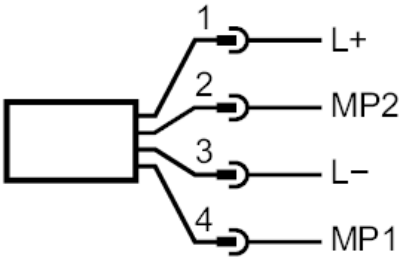

1 (L+)	L+	
2 (OUT2)	MP2	DO, AO, Reset
3 (L-)	L-	
4 (OUT1)	MP1	DO, IO-Link

Electrical connection - plug

Diagrams and graphs
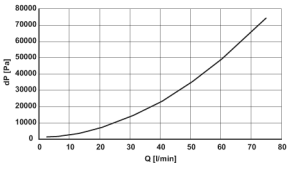
Note on pressure loss