EC3170

Combined antenna for navigation and radio

Mobile/GNSS/WIFI Antenna

Article to be discontinued

Alternative articles: EC3158
When selecting an alternative article and accessories please note that technical data may differ!

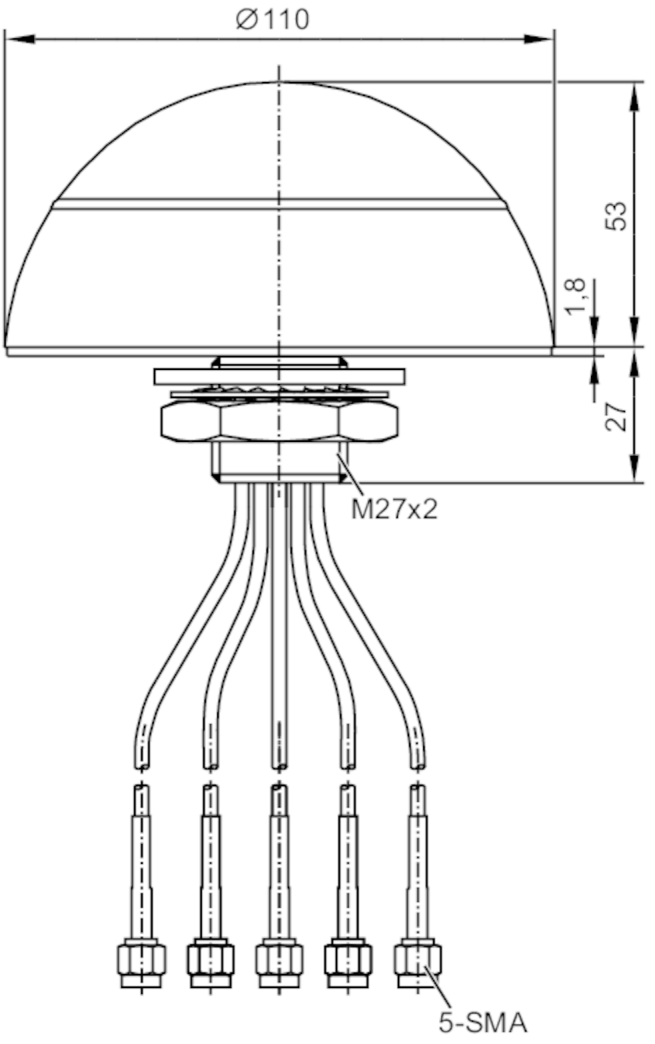

Interfaces	
GNSS	
Frequency band	1575,42...1610 MHz
Type of connector	SMA
Note on interfaces	Operating voltage: 3...5 V DC
	Current consumption: < 15 mA
	Impedance: 50 Ohm
	Polarization: RHCP
	LNA: 28 ± 2 dB
	LNA V.S.W.R.: < 2,0
	noise density: < 1,5 dB

EC3170

Combined antenna for navigation and radio

Mobile/GNSS/WIFI Antenna

Mobile networks		
Transmission standard		LTE Cat-4
Frequency band		LTE: 698...960 MHz; 1710...2690 MHz
Type of connector		SMA
Note on interfaces		Impedance: 50 Ohm
		Polarization: linear vertical
WLAN		
Frequency band		2400...2483,5 MHz; 4900...5825 MHz
Type of connector		SMA
Note on interfaces		Impedance: 50 Ohm
		Polarization: linear
		noise density: 2 dBi
Operating conditions		
Ambient temperature	[°C]	-40...85
Protection		IP 67
Mechanical data		
Weight	[g]	597.5
Type of mounting		screw mounting
Dimensions	[mm]	Ø 110 / L = 55
Material		ABS
Remarks		
Pack quantity		1 pcs.

Electrical connection - GPS

Cable: 3 m

Connector: 1 x SMA

Electrical connection - Mobile networks

Cable: 3 m

Connector: 2 x SMA

Electrical connection - WLAN

Cable: 3 m

Connector: 2 x SMA