EC3133

Combined antenna for WLAN and Bluetooth

WLAN/BLE/FAKRA-I Antenna

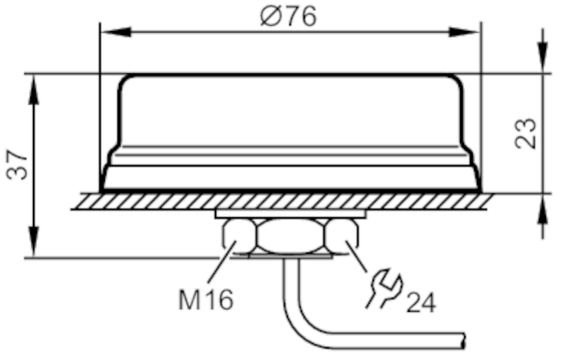

Interfaces		
WLAN		
Frequency band		2400...2480 MHz (802.11b/g/n); 5150...5852 MHz (802.11a/h/j/n/ac)
Type of connector		FAKRA
Note on interfaces		VSWR: < 2,0
		Antenna gain (2,4 GHz): + 3 dBi
		Antenna gain (5,3 GHz): + 1 dBi
		Power: < 10 W
Operating conditions		
Ambient temperature	[°C]	-40...85
Protection		IP 69K
Tests / approvals		
Standard		IEC 60068-2-14 Nb; IEC 60068-2-14 Na; IEC 60068-2-3 Db; IEC 60068-2-2; IEC 60068-2-27; ISO 16750-2; EN 45545-2; ECE R 118
Mechanical data		
Weight	[g]	105.85
Type of mounting		screw mounting; (M16 x 1,5)
Dimensions	[mm]	Ø 76 / L = 23
Tightening torque	[Nm]	5
Remarks		
Remarks		When mounting the antenna(s) in vehicles avoid the vicinity of fuel tanks, vessels with explosives or insufficiently screened electronic components.
		Do not install antenna inside closed metal construction (e.g. in driver's cabin).
		Clean the mounting surface before the installation.
		Do not extend or shorten antenna cable.
		Avoid direct exposure to steam or high-pressure cleaning during car wash.
		Radio communication can affect the function of electronic devices that are not correctly shielded.
		Contact the manufacturer of the corresponding device in case of any interference.
Pack quantity		1 pcs.

Electrical connection - WLAN / Bluetooth
Cable: 2 m
Connector: FAKRA I

EC3133

Combined antenna for WLAN and Bluetooth

WLAN/BLE/FAKRA-I Antenna

Diagrams and graphs

signal pattern

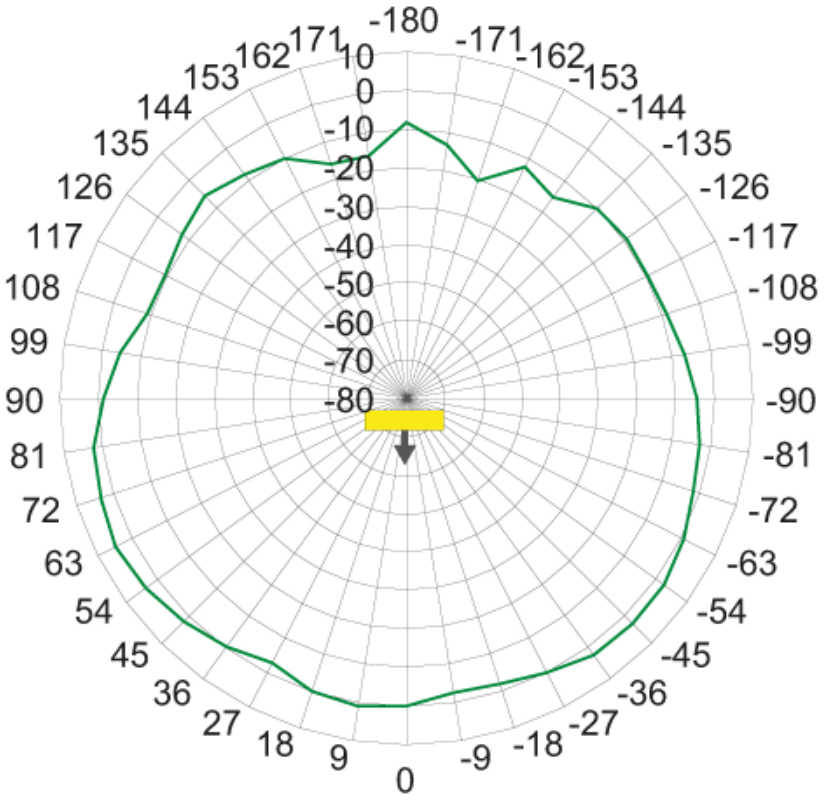

measured with a 0.6 m cable on a base area of 300 mm x 300 mm