DF3110

Distribution module for ground potential

Pot.Module GND/10x 2.5mm2

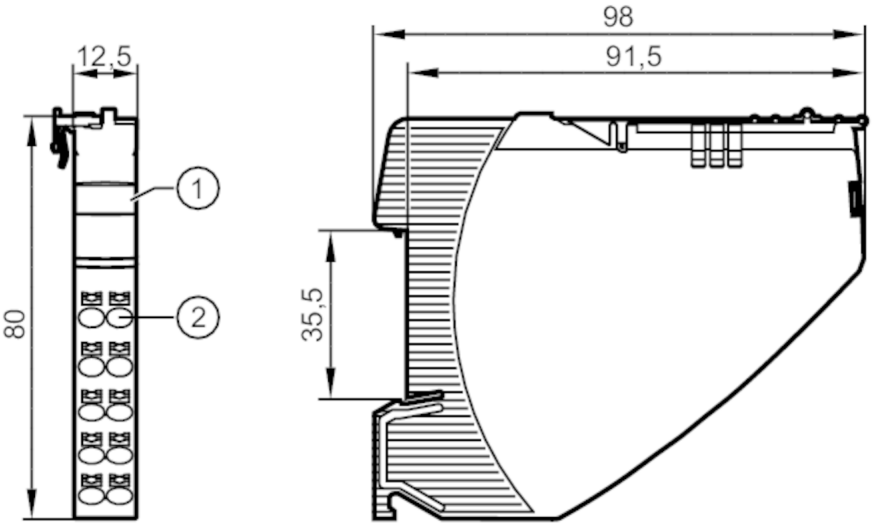

1 panel for labelling
2 push-in terminal 24 V DC

Application			
Design		potential module GND (10 x 2,5 mm²)	
Electrical data			
Operating voltage	[V]	18...30 DC	
Nominal voltage DC	[V]	24	
Protection class		III	
Max. load current	[A]	20	
Operating conditions			
Ambient temperature	[°C]	-25...60	
Storage temperature	[°C]	-40...70	
Protection		IP 20	
Tests / approvals			
EMC		EN 61000-6-3	radiation of interference
		EN 61000-6-2	noise immunity
Mechanical data			
Weight	[g]	62.5	
Type of mounting		Mounting on DIN rail	
Installation instruction		String mounting possible	
Dimensions	[mm]	80 x 12.5 x 98.5	
Remarks			
Pack quantity		1 pcs.	

DF3110

Distribution module for ground potential

Pot.Module GND/10x 2.5mm2

Electrical connection

push-in terminals:
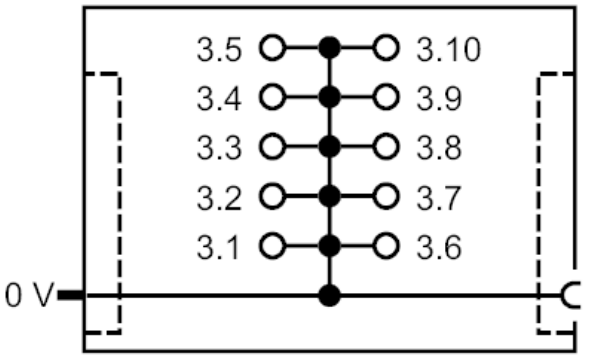
Connection