DF1220

Circuit protection module for an uninterrupted power supply

Fuse/Standard/24VDC/2x1-10A

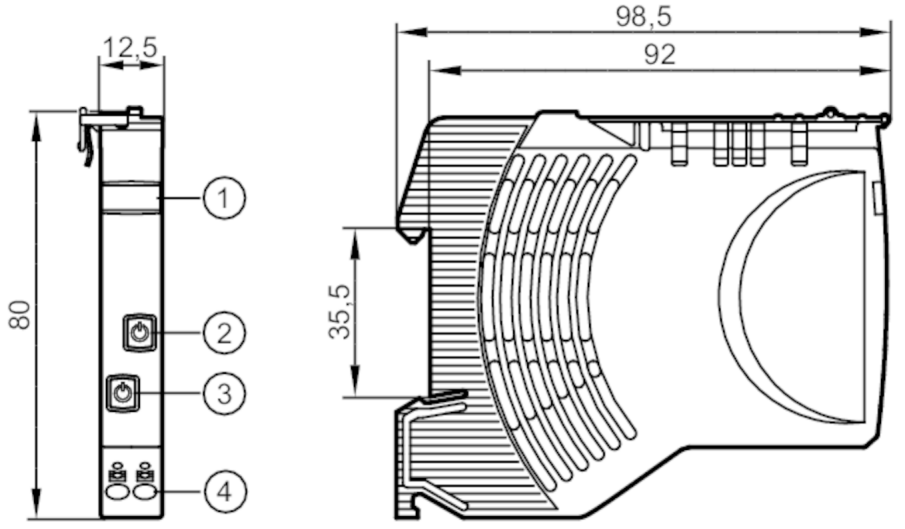

1 panel for labelling
2 pushbutton on / off / reset Status LED 2
3 pushbutton on / off / reset Status LED 1
4 push-in terminals Outputs 1/2

Application		
Design		housing for DIN rail mounting
Installation		rail TH35; according to EN 60715
Electrical data		
Operating voltage	[V]	to SELV/PELV
Nominal voltage DC	[V]	24
Input voltage DC	[V]	19.2...30
Protection class		III
Reverse polarity protection		yes
Mains buffering time (nominal voltage 24 V DC)	[ms]	10
Closed-circuit current	[mA]	12
Power loss (nominal voltage 24 V DC)	[W]	1.292
Number of channels		2
Nominal current	[A]	1...10
Nominal current (Fail Safe Element)	[A]	10
Outputs		
Load capacitance, total	[mF]	20
Operating conditions		
Ambient temperature	[°C]	-25...60
Storage temperature	[°C]	-40...70
Protection		IP 20; (on the front)
Degree of soiling		2

DF1220

Circuit protection module for an uninterrupted power supply

Fuse/Standard/24VDC/2x1-10A

Tests / approvals		
EMC	EN 61000-6-3	radiation of interference
	EN 61000-6-2	noise immunity

Mechanical data		
Weight	[g]	73.5
Housing		rectangular
Type of mounting		Mounting on DIN rail; (TH35 (EN 60715))
Dimensions	[mm]	80 x 12.5 x 98

Displays / operating elements		
Display	status	2 x LED, red / green / orange
Operating elements	2 x	pushbuttons

Remarks	
Pack quantity	1 pcs.

Electrical connection

push-in terminals:

contact lever/strip:

Connection

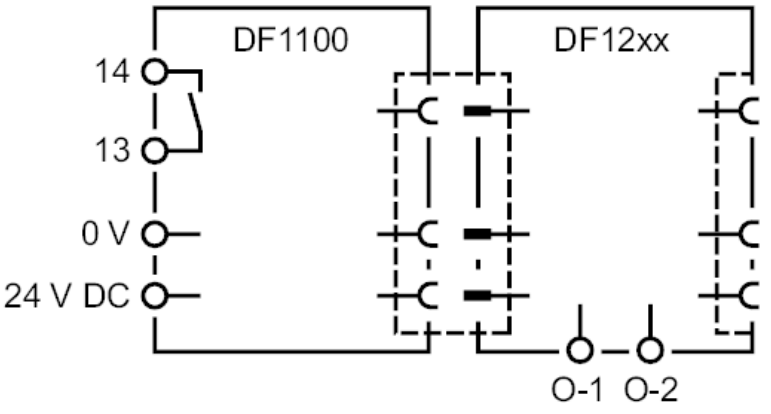

Diagrams and graphs

Output curve

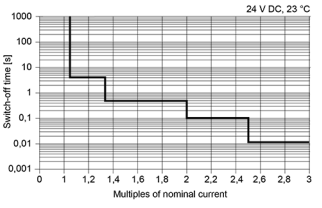

Time-current characteristics