DF1210

Electronic circuit breaker

Fuse/Standard/24VDC/10A

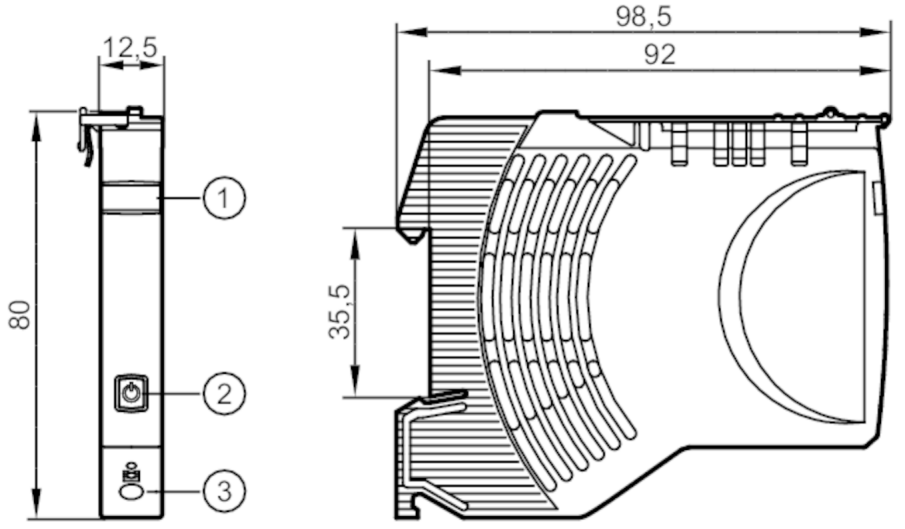

1 panel for labelling
2 pushbutton on / off / reset Status LED 1
3 push-in terminal Output 1

Application		
Design		housing for DIN rail mounting
Electrical data		
Operating voltage	[V]	to SELV/PELV
Nominal voltage DC	[V]	24
Input voltage DC	[V]	18...30
Protection class		III
Mains buffering time (nominal voltage 24 V DC)	[ms]	10
Closed-circuit current	[mA]	5
Power loss (nominal voltage 24 V DC)	[W]	1.992
Number of channels		1
Nominal current	[A]	10
Nominal current (Fail Safe Element)	[A]	10
Outputs		
Load capacitance, total	[mF]	20
Operating conditions		
Ambient temperature	[°C]	-25...60
Storage temperature	[°C]	-40...70
Protection		IP 20; (on the front)
Degree of soiling		2

DF1210

Electronic circuit breaker

Fuse/Standard/24VDC/10A

Tests / approvals		
EMC	EN 61000-6-3	radiation of interference
	EN 61000-6-2	noise immunity

Mechanical data		
Weight	[g]	67.5
Housing		rectangular
Type of mounting		Mounting on DIN rail; (TH35 (EN 60715))
Dimensions	[mm]	80 x 12.5 x 98.5

Displays / operating elements		
Display	status	1 x LED, red / green / orange
Operating elements	1 x	pushbuttons

Remarks	
Pack quantity	1 pcs.

Electrical connection

push-in terminals:

contact lever/strip:

Connection

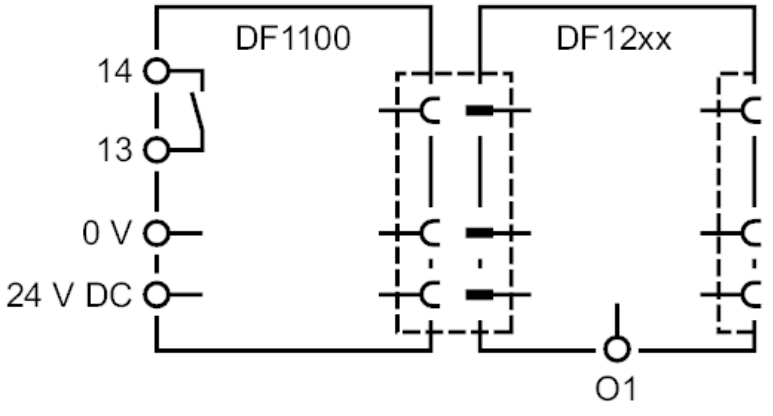

Diagrams and graphs

Output curve

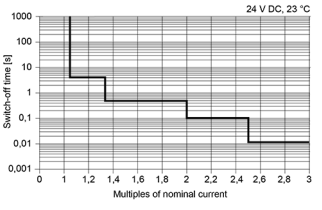

Time-current characteristics